COMPANY WITH QUALITY MANAGEMENT
SYSTEM CERTIFIED BY DNV
= ISO 9001:2008 =

LC Series Parts Breakdown

Rev. 06
05-04-2013

jurop

LC 300-420-580 D

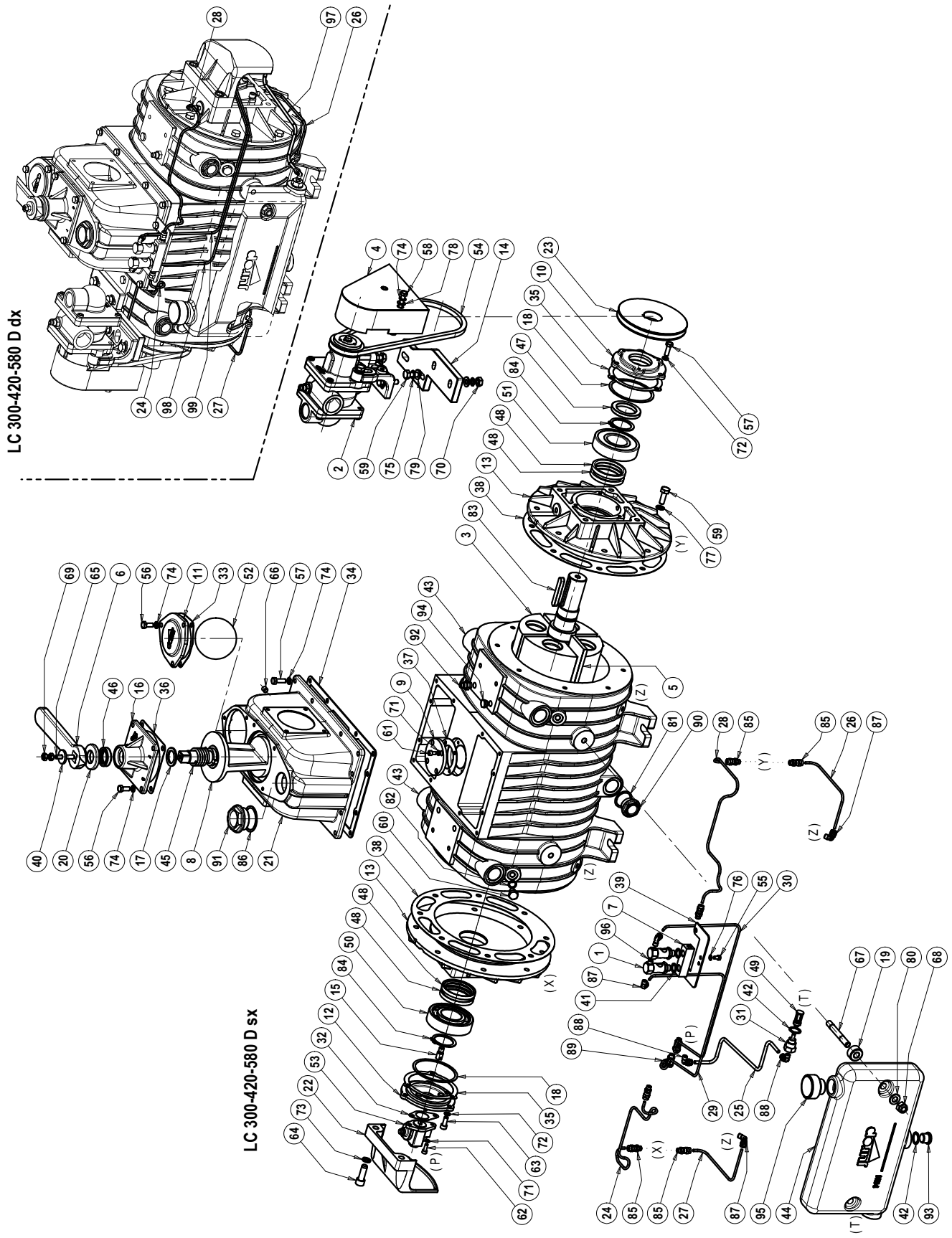

LC 300 D

Pos.	Code	Description	Q.ty
1	1401200700	OIL DRIPPER	2
2	1407200900	WATER PUMP SX (LC D SX)	1
	1407200800	WATER PUMP DX (LC D DX)	1
3	1521506500	ROTOR LC300 D	1
	1521506400	ROTOR LC300 D USA	1
4	154201TWB0	BELT PROTECTION LC D SX	1
	154201TVB0	BELT PROTECTION LC D DX	1
5	1601606400	VANE LC300	4
6	1605500000	HANDLE	1
7	1608100000	DISTRIBUTOR	1
8	1608501700	CONVEYOR	1
9	1610051700	FLANGE	1
10	1610508200	FLANGE	1
11	1610510800	FLANGE	1
12	1610512900	OIL PUMP FLANGE	1
13	1610513500	FLANGE	2
14	161201X4B0	PUMP SUPPORT	1
15	1622002600	SHAFT M10	1
16	1623100000	CONVEYOR FLANGE	1
17	1624027500	SPACER	1
18	1624037700	SPACER	2
19	1624042800	SPACER	2
20	1624202300	4 WAYS SPACER	1
21	1627505300	MANIFOLD	1
22	1642100200	REAR PROTECTION	1
23	165351TXB0	DRIVEN PULLEY	1
24	16630D5SB0	LUBRICATION LINE	1
25	16630D5PB0	LUBRICATION LINE	1
	16630D5IB0	LUBRICATION LINE USA	1
26	166301SZB0	LUBRICATION LINE	1
27	166301T0B0	LUBRICATION LINE	1
28	16630D5TB0	LUBRICATION LINE	1
29	16630D5XB0	LUBRICATION LINE	1
	16630D5WB0	LUBRICATION LINE USA	
30	16630D61B0	LUBRICATION LINE	1
31	1673001000	OIL FILTER PLUG	1
32	1680609700	OIL PUMP GASKET	1
33	1680611600	MANIFOLD GASKET	1
34	1680614300	MANIFOLD GASKET	1
35	1680707300	FLANGE GASKET	2
36	1680700200	FLANGE GASKET	1
37	1680709700	GASKET	1
38	1680709800	HOUSING GASKET	2
39	16120CJ5B0	OIL DRIPPER FLANGE	1
40	1685002800	WASHER 30X8.5X4	1
41	1685100000	WASHER 14X20X1.5 AL	2
42	1685100300	WASHER D 20	2
43	16875BHDB0	HOUSING LC300	1
44	1687600000	OIL TANK	1
45	1691000000	SPRING	1
46	4022200030	Y-SEAL 41X27X10	1
47	4022200044	Y-SEAL 65X45X8	1
48	4022200416	Y-SEAL 60X75X8	4
49	4022300001	OIL FILTER	1

Pos.	Code	Description	Q.ty
50	4023100047	BEARING 6309 C3	1
51	4023110098	BEARING NU 309 ECJ/C3	1
52	4023250501	RUBER BALL D80	1
53	4024251000	OIL PUMP CW ROTATION (LC D DX)	1
	4024251500	OIL PUMP CCW ROTATION (LC D SX)	1
54	4025350019	BELTSPZ 925	1
55	4026101301	SCREW M6X10	2
56	4026102806	SCREW M8X20	7
57	4026102807	SCREW M8X25	16
58	4026102819	SCREW M8X90	2
59	4026102908	SCREW M10X30	18
60	4026103030	SCREW M12x16	4
61	4026120301	SCREW M6X12	4
62	4026121305	SCREW M6X16	2
63	4026121405	SCREW M8X20	3
64	4026121710	SCREW M12X35	2
65	4026135414	SCREW M8X45	1
66	4026135504	SCREW M10X10	1
67	4026171211	SCREW M12X80	2
68	4026305508	NUT M12 SELFLOCKING	2
69	4026308005	NUT M8	2
70	4026308006	NUT M10	2
71	4026350503	WASHER GROWER M6 Q	6
72	4026350505	WASHER GROWER M8 Q	6
73	4026350508	WASHER GROWER M12 Q	2
74	4026350706	WASHER GROWER M8 P	21
75	4026350708	WASHER GROWER M10 P	4
76	4026351504	TOOTHED WASHER M6	2
77	4026351506	TOOTHED WASHER M10	16
78	4026357005	WASHER M8	2
79	4026357006	WASHER M10	4
80	4026357007	WASHER M12	2
81	4026359001	WASHER 40X33.5X1.5 AL	6
82	4026359006	WASHER 13.5X18X1.5 AL	4
83	4026501008	TAB 12X8X70	1
84	4026510032	SEEGER E45	2
85	4026702000	FITTING	6
86	/		
87	4026706000	FITTING	4
88	4026706003	FITTING	2
89	4026706101	FITTING	2
90	4026904003	PLUG 1”	6
91	/		
92	4026904300	VENT PLUG ¼”	2
93	4026904503	PLUG M20X1.5	1
94	4026905002	PLUG ¼”	2
95	4026910103	PLUG	1
96	4026910601	PLUG 1/8	2
97	16630D5MB0	LUBRICATION LINE	1
	16630D5IB0	LUBRICATION LINE USA	1
98	16630D60B0	LUBRICATION LINE	1
	16630D60B0	LUBRICATION LINE USA	1
99	16630D5WB0	LUBRICATION LINE	1
	16630D5WB0	LUBRICATION LINE USA	1

jurop

LC 420 D

Pos.	Code	Description	Q.ty
1	1401200700	OIL DRIPPER	2
2	1407200900	WATER PUMP SX (LC D SX)	1
	1407200800	WATER PUMP DX (LC D DX)	1
3	1521505900	ROTOR LC420 D	1
	1521505700	ROTOR LC420 D USA	1
4	154201TWB0	BELT PROTECTION LC D SX	1
	154201TVB0	BELT PROTECTION LC D DX	1
5	1601606300	VANE LC420	4
6	1605500100	HANDLE	1
7	1608100000	DISTRIBUTOR	1
8	1608502500	CONVEYOR	1
9	1610051700	FLANGE	1
10	1610508200	FLANGE	1
11	1610509800	FLANGE	1
12	1610512900	OIL PUMP FLANGE	1
13	1610513500	FLANGE	2
14	161201X4B0	PUMP SUPPORT	1
15	1622002600	SHAFT M10	1
16	1623100500	CONVEYOR FLANGE	1
17	1624027500	SPACER	1
18	1624037700	SPACER	2
19	1624042800	SPACER	2
20	1624202300	4 WAYS SPACER	1
21	1627504600	MANIFOLD	1
22	1642100200	REAR PROTECTION	1
23	165351TXB0	DRIVEN PULLEY	1
24	166301STB0	LUBRICATION LINE	1
25	166301SXB0	LUBRICATION LINE	1
	166303QXB0	LUBRICATION LINE USA	1
26	166301SZB0	LUBRICATION LINE	1
27	166301T0B0	LUBRICATION LINE	1
28	166301T1B0	LUBRICATION LINE	1
29	166301T5B0	LUBRICATION LINE	1
30	166301T8B0	LUBRICATION LINE	1
31	1673001000	OIL FILTER PLUG	1
32	1680609700	OIL PUMP GASKET	1
33	1680610500	MANIFOLD GASKET	1
34	1680614300	MANIFOLD GASKET	1
35	1680707300	FLANGE GASKET	2
36	1680707800	FLANGE GASKET	1
37	1680709700	GASKET	1
38	1680709800	HOUSING GASKET	2
39	1681100200	OIL DRIPPER FLANGE	1
40	1685002800	WASHER 30X8.5X4	1
41	1685100000	WASHER 14X20X1.5 AL	2
42	1685100300	WASHER D 20	2
43	1687508200	HOUSING LC420	1
44	1687600000	OIL TANK	1
45	1691000000	SPRING	1
46	4022200030	Y-SEAL 41X27X10	1
47	4022200044	Y-SEAL 65X45X8	1
48	4022200416	Y-SEAL 60X75X8	4
49	4022300001	OIL FILTER	1
50	4023100047	BEARING 6309 C3	1
51	4023110098	BEARING NU 309 ECJ/C3	1
52	4023250502	RUBBER BALL D90	1
53	4024251000	OIL PUMP CW ROTATION (LC D DX)	1
	4024251500	OIL PUMP CCW ROTATION (LC D SX)	1
54	4025350019	BELTSPZ 925	1
55	4026101301	SCREW M6X10	2
56	4026102806	SCREW M8X20	7
57	4026102807	SCREW M8X25	16
58	4026102819	SCREW M8X90	2
59	4026102908	SCREW M10X30	18
60	4026103030	SCREW M12x16	4
61	4026120301	SCREW M6X12	4
62	4026121305	SCREW M6X16	2
63	4026121405	SCREW M8X20	3
64	4026121710	SCREW M12X35	2
65	4026135414	SCREW M8X45	1
66	4026135504	SCREW M10X10	1
67	4026171211	SCREW M12X80	2
68	4026305508	NUT M12 SELFLOKING	2
69	4026308005	NUT M8	2
70	4026308006	NUT M10	2
71	4026350503	WASHER GROWER M6 Q	6
72	4026350505	WASHER GROWER M8 Q	6
73	4026350508	WASHER GROWER M12 Q	2
74	4026350706	WASHER GROWER M8 P	21
75	4026350708	WASHER GROWER M10 P	4
76	4026351504	TOOTHED WASHER M6	2
77	4026351506	TOOTHED WASHER M10	16
78	4026357005	WASHER M8	2
79	4026357006	WASHER M10	4
80	4026357007	WASHER M12	2
81	4026359001	WASHER 40X33.5X1.5 AL	6
82	4026359006	WASHER 13.5X18X1.5 AL	4
83	4026501008	TAB 12X8X70	1
84	4026510032	SEEGER E45	2
85	4026702000	FITTING	6
86	4026702708	WASHER 1”1/2 CU	1
87	4026706000	FITTING	4
88	4026706003	FITTING	2
89	4026706101	FITTING	2
90	4026904003	PLUG 1”	6
91	4026904005	PLUG 1”1/2	1
92	4026904300	VENT PLUG ¼”	2
93	4026904503	PLUG M20X1.5	1
94	4026905002	PLUG ¼”	2
95	4026910103	PLUG	1
96	4026910601	PLUG 1/8	2
97	166301SWB0	LUBRICATION LINE	1
	166303QWB0	LUBRICATION LINE USA	1
98	1663062600	LUBRICATION LINE	1
99	1663062700	LUBRICATION LINE	1

LC 580 D

Pos.	Code	Description	Q.ty
1	1401200700	OIL DRIPPER	2
2	1407200900	WATER PUMP SX (LC D SX)	1
	1407200800	WATER PUMP DX (LC D DX)	1
3	1521507300	ROTOR LC580 D	1
4	154201TWB0	BELT PROTECTION LC D SX	1
	154201TVB0	BELT PROTECTION LC D DX	1
5	16016BXNB0	VANE LC580	4
6	1605500100	HANDLE	1
7	1608100000	DISTRIBUTOR	1
8	1608502500	CONVEYOR	1
9	1610051700	FLANGE	1
10	1610508200	FLANGE	1
11	1610509800	FLANGE	1
12	1610512900	OIL PUMP FLANGE	1
13	1610514300	FLANGE	2
14	161201X4B0	PUMP SUPPORT	1
15	1622002600	SHAFT M10	1
16	1623100500	CONVEYOR FLANGE	1
17	1624027500	SPACER	1
18	4026300025	SPACER	2
19	1624042800	SPACER	2
20	1624202300	4 WAYS SPACER	1
21	1627504600	MANIFOLD	1
22	1642100200	REAR PROTECTION	1
23	165351TXB0	DRIVEN PULLEY	1
24	1663069100	LUBRICATION LINE	1
25	1663069500	LUBRICATION LINE	1
26	1663068900	LUBRICATION LINE	1
27	1663069000	LUBRICATION LINE	1
28	1663068700	LUBRICATION LINE	1
29	1663069600	LUBRICATION LINE	1
30	1663069700	LUBRICATION LINE	1
31	1673001000	OIL FILTER PLUG	1
32	1680609700	OIL PUMP GASKET	1
33	1680610500	MANIFOLD GASKET	1
34	1680614300	MANIFOLD GASKET	1
35	1680707300	FLANGE GASKET	2
36	1680707800	FLANGE GASKET	1
37	1680709700	GASKET	1
38	1680712200	HOUSING GASKET	2
39	1681100200	OIL DRIPPER FLANGE	1
40	1685002800	WASHER 30X8.5X4	1
41	1685100000	WASHER 14X20X1.5 AL	2
42	1685100300	WASHER D 20	2
43	1687511000	HOUSING LC580	1
44	1687600000	OIL TANK	1
45	1691000000	SPRING	1
46	4022200030	Y-SEAL 41X27X10	1
47	4022200044	Y-SEAL 65X45X8	1
48	4022200113	Y-SEAL 70X55X15	4
49	4022300001	OIL FILTER	1
50	4023100047	BEARING 6309 C3	1
51	4023110098	BEARING NU 309	1
52	4023250502	RUBBER BALL D80	1
53	4024251000	OIL PUMP CW ROTATION (LC D DX)	1
	4024251500	OIL PUMP CW ROTATION (LC D SX)	1
54	4025350020	BELTSPZ 925	1
55	4026101301	SCREW M6X10	2
56	4026102806	SCREW M8X20	7
57	4026102807	SCREW M8X25	16
58	4026102819	SCREW M8X90	2
59	4026102908	SCREW M10X30	18
60	/		
61	4026121303	SCREW M6X12	4
62	4026121305	SCREW M6X16	2
63	4026102806	SCREW M8X20	3
64	4026121710	SCREW M12X35	2
65	4026135414	SCREW M8X45	1
66	4026135504	SCREW M10X10	1
67	4026171211	SCREW M12X80	2
68	4026305508	NUT M12 SELFLOKING	2
69	4026308005	NUT M8	2
70	4026308006	NUT M10	2
71	4026350503	WASHER GROWER M6 Q	6
72	4026351505	WASHER GROWER M8 Q	6
73	4026350508	WASHER GROWER M12 Q	2
74	4026350706	WASHER GROWER M8 P	21
75	4026350708	WASHER GROWER M10 P	4
76	4026351504	TOOTHED WASHER M6	2
77	4026351507	TOOTHED WASHER M10	16
78	4026357005	WASHER M8	2
79	4026357006	WASHER M10	4
80	4026357007	WASHER M12	2
81	4026359001	WASHER 40X33.5X1.5 AL	6
82	/		
83	4026501007	TAB 12X8X63	1
84	/		
85	4026702000	FITTING	6
86	/		
87	4026706000	FITTING	4
88	4026706003	FITTING	2
89	4026706101	FITTING	2
90	4026904003	PLUG 1”	6
91	/		
92	4026904300	VENT PLUG ¼”	2
93	4026904503	PLUG M20X1.5	1
94	4026904300	PLUG ¼”	2
95	4026910103	PLUG	1
96	4026910601	PLUG 1/8	2
97	1663069200	LUBRICATION LINE	1
98	1663069400	LUBRICATION LINE	1
99	1663069300	LUBRICATION LINE	1

jurop

LC 300-420-580 M540 - M1000 - HDR

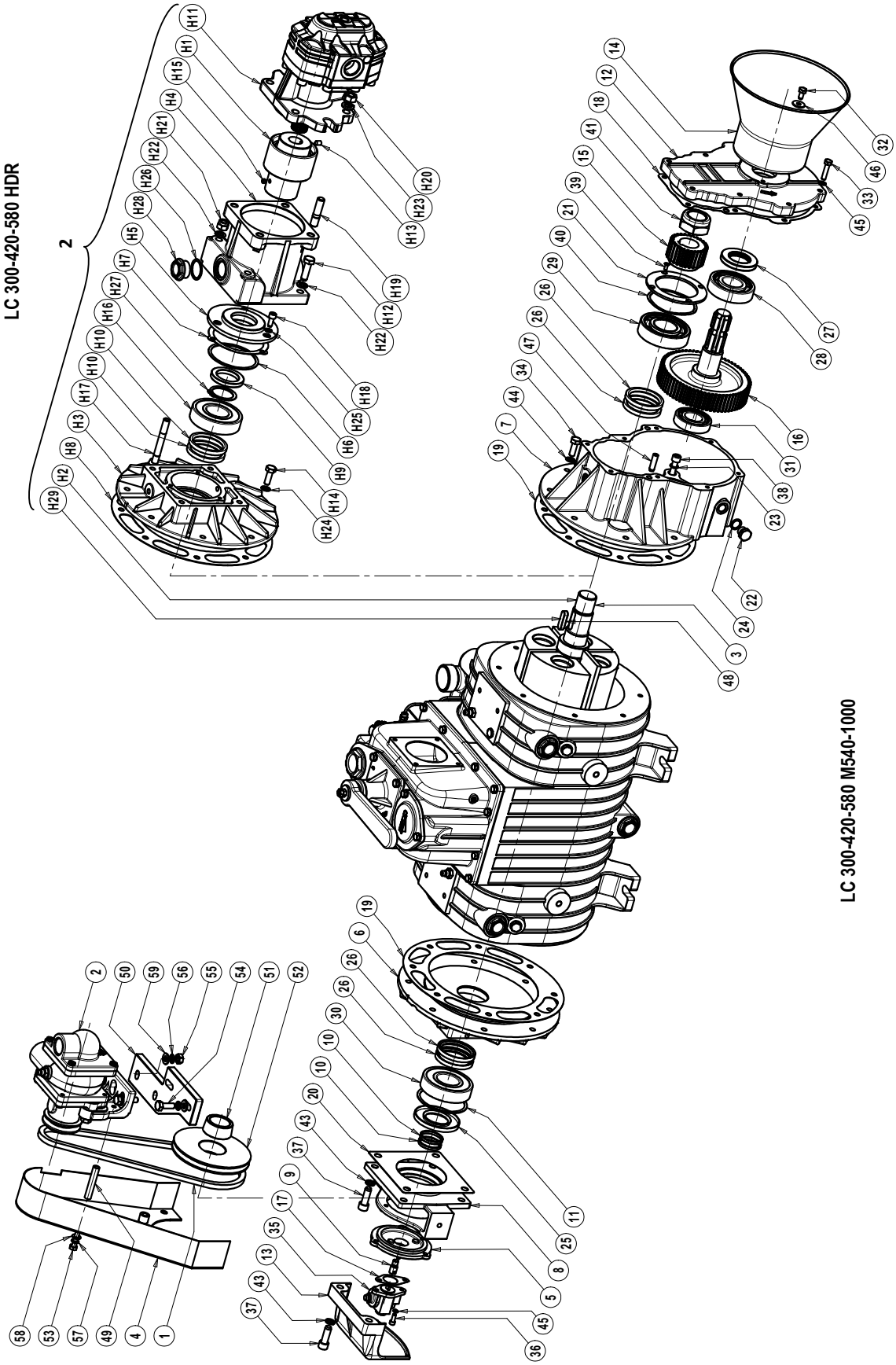

LC 300-420 M540 - M1000 - HDR

Pos.	Code	Description	Q.ty
1		**GEARBOX 540 – 1000 RPM**	
1	4025350019	BELT SPZ 925	1
2	1407200900	WATER PUMP SX (LC M SX - LC HDR DX)	1
	1407200800	WATER PUMP DX (LC M DX - LC HDR SX)	1
3	1521506800	ROTOR LC300 M	1
	1521505800	ROTOR LC420 M	1
4	154201TUB0	PROTECTION (LC M SX – HDR DX)	1
	154201TSB0	PROTECTION (LC M DX – HDR SX)	1
5	1610512900	OIL PUMP SUPPORT	1
6	1610513500	FLANGE	1
7	1610513600	GEARBOX M	1
8	1613501400	OIL PUMP FLANGE	1
9	1622002600	SHAFT M10	1
10	1624037500	SPACER	2
11	1624037700	SPACER	1
12	1640501200	GEARBOX FLANGE	1
13	1642100200	REAR PROTECTION	1
14	4029602806	DRIVE SHAFT PROTECTION	1
15	1651005500	PINION Z28 (540 RPM)	1
	1651010700	PINION Z42 (1000 RPM)	1
16	1651010500	GEAR Z70 (540 RPM)	1
	1651010600	GEAR Z56 (1000 RPM)	1
17	1680609700	OIL PUMP GASKET	1
18	1680614100	GEARBOX GASKET	1
19	1680709800	HOUSING GASKET	2
20	1680710000	GASKET	1
21	1681006500	COMP. RING FLANGE	1
22	1684000000	PLUG 3/8"	3
23	1685100100	WASHER 10X16X1.5 CU	2
24	1685100200	WASHER 17X22X1.5 AL	3
25	4022200008	Y-SEAL 90X45X8	1
26	4022200416	Y-SEAL 60X75X8	4
27	4022200040	Y-SEAL 72X40X10	1
28	4023100039	BEARING 6308	1
29	4023100047	BEARING 6309 C3	1
30	4023110098	BEARING NU 309 ECJ/C3	1
31	4023100020	BEARING 6207	1
32	4026102804	SCREW M8X16	3
33	4026102809	SCREW M8X35	8
34	4026102908	SCREW M10X30	16
35	4024251000	OIL PUMP DX (LC M SX - LC HDR DX)	1
	4024251500	OIL PUMP SX(LC M DX - LC HDR SX)	1
36	4026121305	SCREW M6X16	2
37	4026121710	SCREW M12X35	6
38	4026121813	SCREW M10X50	2
39	4026155503	SCREW M5X12	4
40	4026300025	COMPENSATION RING	1
41	4026306115	BOLT M36X3 SELFLOCKING	1
42	4026350503	WASHER GROWER M6 Q	6
43	4026350508	WASHER GROWER M12 Q	6
44	4026351506	TOOTHED WASHER M10	15
45	4026351505	TOOTHED WASHER M8	11
46	4026356002	FLAT WASHER 8X24	3
47	4026401806	PIN10X36	2
48	4026501003	TAB 12X8X40	1
49	162403N3B0	SPACER	1
50	161201X4B0	WATER PUMP SUPPORT	1
51	4025426003	BUSHING	1
52	4025426209	PULLEY 150X1 SPZ	1
53	4026102819	SCREW M8X90	1
54	4026102908	SCREW M10X30	1
55	4026308006	NUT M10	2
56	4026350708	WASHER GROWER M10 P	4
57	4026350706	WASHER GROWER M8 P	21
58	4026357005	WASHER M8	1
59	4026357006	WASHER M10	6
2		**HYDRAULIC DRIVE**	
H1	1470102300	JOINT	1
H2	1521506700	ROTOR LC300 HDR	1
	1521506000	ROTOR LC420 HDR	1
H3	1610513500	FLANGE	2
H4	1612501000	BRACKET HDR	1
H5	1610021600	FLANGE HDR	1
H6	1624037700	SPACER	1
H7	1680707300	GASKET	1
H8	1680709800	GASKET	1
H9	4022200044	Y-SEAL 65X45X8	1
H10	4022200416	Y-SEAL 60X75X8	2
H11	4024107009	MOTOR LC300	1
	4024107001	MOTOR LC420	1
H12	4026101613	SCREW M12X40	2
H13	4026136006	SCREW M8X14	1
H14	4026102908	SCREW M10X30	8
H15	4026136003	SCREW M8X8	1
H16	4023110098	BEARING NU309 ECJ/C3	2
H17	4026171211	SCREW M12X80	4
H18	4026121405	SCREW M8X20	3
H19	4026171304	SCREW M14X40	4
H20	4026308008	NUT M14	4
H21	4026305508	NUT M12 SELFLOCKING	4
H22	4026350609	WASHER GROWER M12 P	4
H23	4026350610	WASHER GROWER M14 P	4
H24	4026351506	WASHER M10	8
H25	4026351505	WASHER M8	3
H26	4026359001	WASHER 40X33.5X1.5 AL	1
H27	4026510032	SEEGER E45	1
H28	4026904003	PLUG 1"	1
H29	4026501004	TAB 12X8X45	1

jurop

LC 580 M540 - M1000 - HDR

Pos.	Code	Description	Q.ty
1		**MOLTIPLICATORE 540 – 1000 RPM**	
1	4025350020	BELT SPZ 925	1
2	1407200900	WATER PUMP SX (LC M SX - LC HDR DX)	1
	1407200800	WATER PUMP DX (LC M DX - LC HDR SX)	1
3	1521507400	ROTOR LC580 M	1
4	154201TUB0	PROTECTION (LC M SX – HDR DX)	1
	154201TSB0	PROTECTION (LC M DX – HDR SX)	
5	1610512900	OIL PUMP SUPPORT	1
6	1610514300	FLANGE	1
7	1610514400	GEARBOX M	1
8	1613501400	OIL PUMP FLANGE	1
9	1622002600	SHAFT M10	1
10	1624037500	SPACER	2
11	4026300025	SPACER	1
12	164059V5B0	GEARBOX FLANGE	1
13	1642100200	REAR PROTECTION	1
14	4029602806	DRIVE SHAFT PROTECTION	1
15	1651005300	PINION Z25 (540 RPM)	1
	1651011500	PINION Z36 (1000 RPM)	1
16	165109KEB0	GEAR Z53 (540 RPM)	1
	1651011400	GEAR Z42 (1000 RPM)	1
17	1680609700	OIL PUMP GASKET	1
18	16807BCNB0	GEARBOX GASKET	1
19	1680712200	HOUSING GASKET	2
20	1680710000	GASKET	1
21	1681006500	COMP. RING FLANGE	1
22	1684000000	PLUG 3/8"	3
23	4026351507	WASHER ¼" CU	2
24	1685100200	WASHER 17X22X1.5 AL	3
25	4022200008	Y-SEAL 90X45X8	1
26	4022200113	Y-SEAL 70X55X15 (N°1 PER LATO)	4
27	4022200040	Y-SEAL 72X40X10	1
28	4023100039	BEARING 6308	1
29	4023100047	BEARING 6309	1
30	4023100047	BEARING 6309	1
31	4023100020	BEARING 6207	1
32	4026102804	SCREW M8X16	3
33	4026102810	SCREW M8X40	8
34	4026102908	SCREW M10X30	16
35	4024251000	OIL PUMP DX (LC M SX - LC HDR DX)	1
	4024251500	OIL PUMP SX (LC M DX - LC HDR SX)	1
36	4026121305	SCREW M6X16	2
37	4026103002	SCREW M12X30	6
38	4026121708	SCREW M12X25	2
39	4026155505	SCREW M5X12	4
40	4026300025	COMPENSATION RING	1
41	4026306115	BOLT M36X3 SELFLOCKING	1
42	4026350503	WASHER GROWER M6 Q	6
43	4026350508	WASHER GROWER M12 Q	6
44	4026351507	TOOTHED WASHER M12	15
45	4026351505	TOOTHED WASHER M8	11
46	4026356002	FLAT WASHER 8X24	3
47	4026401806	PIN10X36	2
48	4026501004	TAB 12X8X45	1
49	162403N3B0	SPACER	1
50	161201X4B0	WATER PUMP SUPPORT	1
51	4025426003	BUSHING	1
52	4025426209	PULLEY 150X1 SPZ	1
53	4026102819	SCREW M8X90	1
54	4026102908	SCREW M10X30	1
55	4026308006	NUT M10	2
56	4026350708	WASHER GROWER M10 P	4
57	4026350706	WASHER GROWER M8 P	21
58	4026357005	WASHER M8	1
59	4026357006	WASHER M10	6
2		**HYDRAULIC DRIVE**	
H1	14701BEBB0	JOINT	1
H2	1521507500	ROTOR LC580 HDR	1
H3	1610514300	FLANGE	2
H4	1612501000	BRACKET HDR	1
H5	1610021600	FLANGE HDR	1
H6	4026300025	SPACER	1
H7	1680707300	GASKET	1
H8	1680712200	GASKET	1
H9	4022200044	Y-SEAL 65X45X8	1
H10	4022200113	Y-SEAL 60X75X8	2
H11	4024107004	MOTOR HDR LC580	1
H12	4026101613	SCREW M12X40	2
H13	4026136005	SCREW M8X12	1
H14	4026103002	SCREW M12X30	8
H15	4026136005	SCREW M8X12	1
H16	4023100150	BEARING 6309	2
H17	4026171211	SCREW M12X80	4
H18	4026120403	SCREW M8X20	3
H19	4026171304	SCREW M14X40	4
H20	4026308008	NUT M14	4
H21	4026305508	NUT M12 SELFLOCKING	4
H22	4026350710	WASHER GROWER M14	4
H23	4026350610	WASHER GROWER M14 P	4
H24	4026351507	WASHER M12	8
H25	4026351505	WASHER M8	3
H26	4026359001	WASHER 40X33.5X1.5 AL	1
H27	/		
H28	4026904003	PLUG 1"	1
H29	4026501004	TAB 12X8X45	1

LUBRICATION LINES LC 300-420-580 M - HDR

LC HDR sx

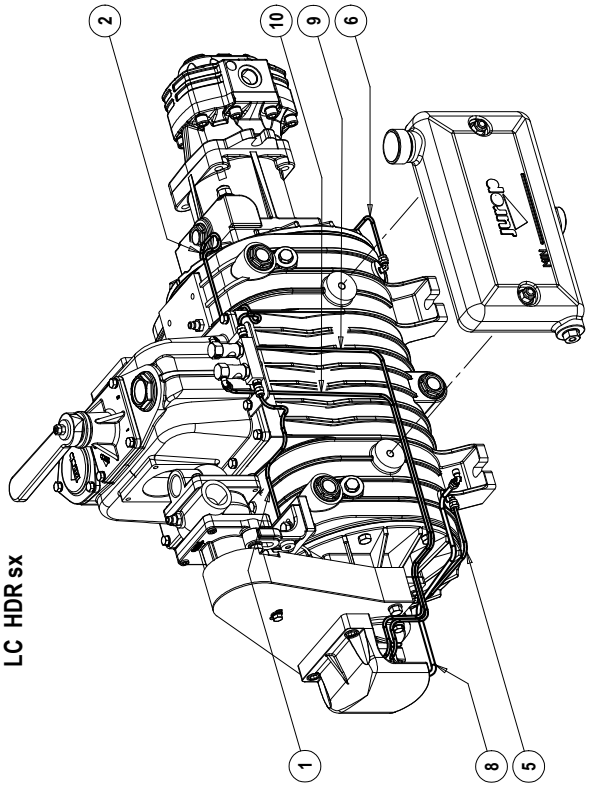

LC HDR dx

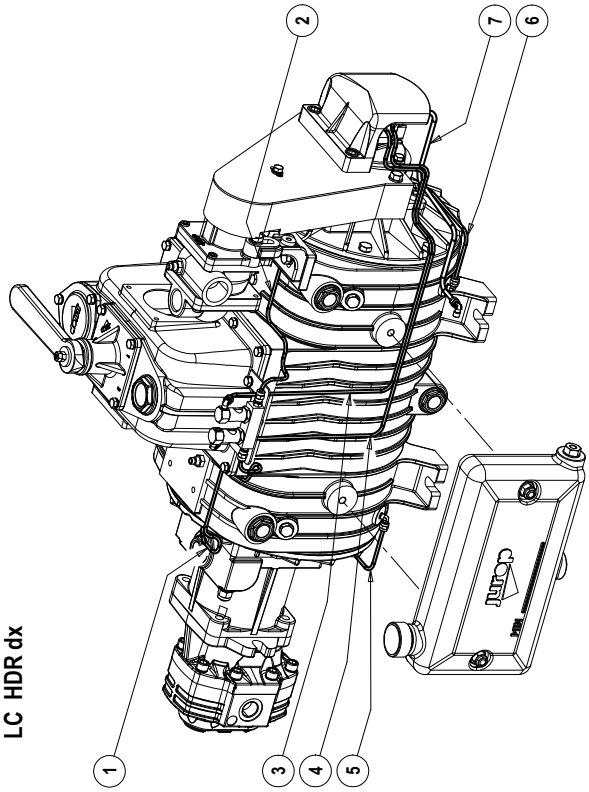

LC M sx

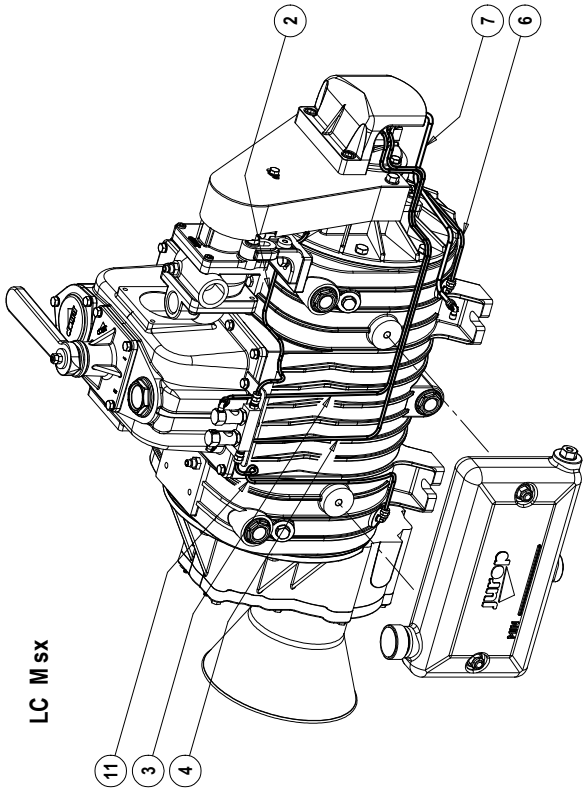

Lubrication lines LC 300 HDR - M

Pos.	Code	Description	Q.ty
1	16630D5SB0	LUBRICATION LINE	1
2	16630D5TB0	LUBRICATION LINE	1
3	16630D5UB0	LUBRICATION LINE	1
4	16630D5YB0	LUBRICATION LINE	1
5	166301T0B0	LUBRICATION LINE	1
6	166301SZB0	LUBRICATION LINE	1
7	16630D5LB0	LUBRICATION LINE	1
8	16630D5JB0	LUBRICATION LINE	1
9	166301T7B0	LUBRICATION LINE	1
10	166301T4B0	LUBRICATION LINE	1
11	16630D5QB0	LUBRICATION LINE	1

Lubrication lines LC 420 HDR - M

Pos.	Code	Description	Q.ty
1	166301STB0	LUBRICATION LINE	1
2	166301T1B0	LUBRICATION LINE	1
3	166301T2B0	LUBRICATION LINE	1
4	166301T6B0	LUBRICATION LINE	1
5	166301T0B0	LUBRICATION LINE	1
6	166301SZB0	LUBRICATION LINE	1
7	166301SVB0	LUBRICATION LINE	1
8	166301SUB0	LUBRICATION LINE	1
9	16630D5ZB0	LUBRICATION LINE	1
10	16630D5VB0	LUBRICATION LINE	1
11	166301SYB0	LUBRICATION LINE	1

Lubrication lines LC 580 HDR - M

Pos.	Code	Description	Q.ty
1	1663069100	LUBRICATION LINE	1
2	1663068700	LUBRICATION LINE	1
3	1663068500	LUBRICATION LINE	1
4	1663068600	LUBRICATION LINE	1
5	1663069000	LUBRICATION LINE	1
6	1663068900	LUBRICATION LINE	1
7	1663068400	LUBRICATION LINE	1
8	1663069500	LUBRICATION LINE	1
9	1663069700	LUBRICATION LINE	1
10	1663069600	LUBRICATION LINE	1
11	1663068800	LUBRICATION LINE	1

COOLING WATER PUMP LC

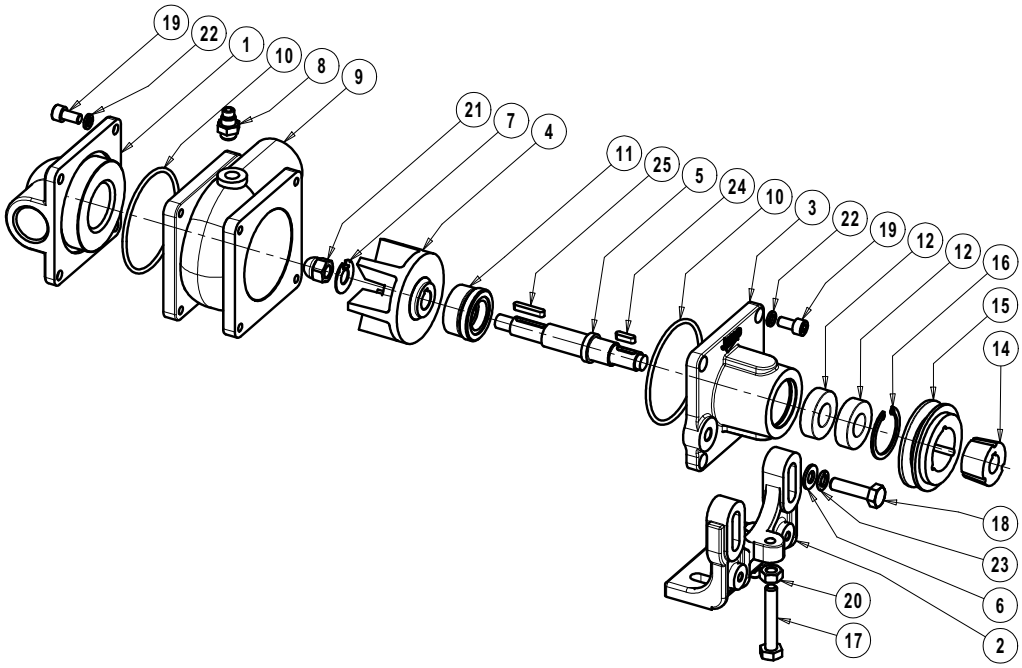

Cooling water pump LC

Pos.	Code	Description	Q.ty
1	1610506500	REAR FLANGE	1
2	1613500900	LOWER SUPPORT	1
3	1613501000	FRONT SUPPORT	1
4	1621502800	IMPELLER	1
5	1650009700	SHAFT	1
6	4026357006	WASHER M10	6
7	1685002400	SAFETY WASHER	1
8	4026904300	VENT PLUG 1/4	1
9	1687504500	HOUSING	1
10	4022200235	OR 4325	2
11	4022216915	MECHANICAL SEAL	1
12	4023100516	BEARING 6004 RS1	2
13	4025350021	BELT SPZ 975	1

Pos.	Code	Description	Q.ty
14	4025422300	BUSHING 2820 Ø 16	1
15	4025422402	PULLEY SPZ 71 X 1	1
16	4026510525	SEEGER I 42 UNI 7437	1
17	4026102914	SCREW M8 x 60	1
18	4026107214	SCREW M8 x 10	4
19	4026120401	SCREW M8 x 16	10
20	4026308006	NUT M 10	1
21	4026322106	NUT M 12	1
22	4026350505	WASHER GROWER M8	10
23	4026350608	WASHER GROWER M10	4
24	4026500605	TAB 5 x 5 x 18	1
25	4026500609	TAB 5 x 5 x 28	1

jurop

ACCESSORIES LC 300-420-580

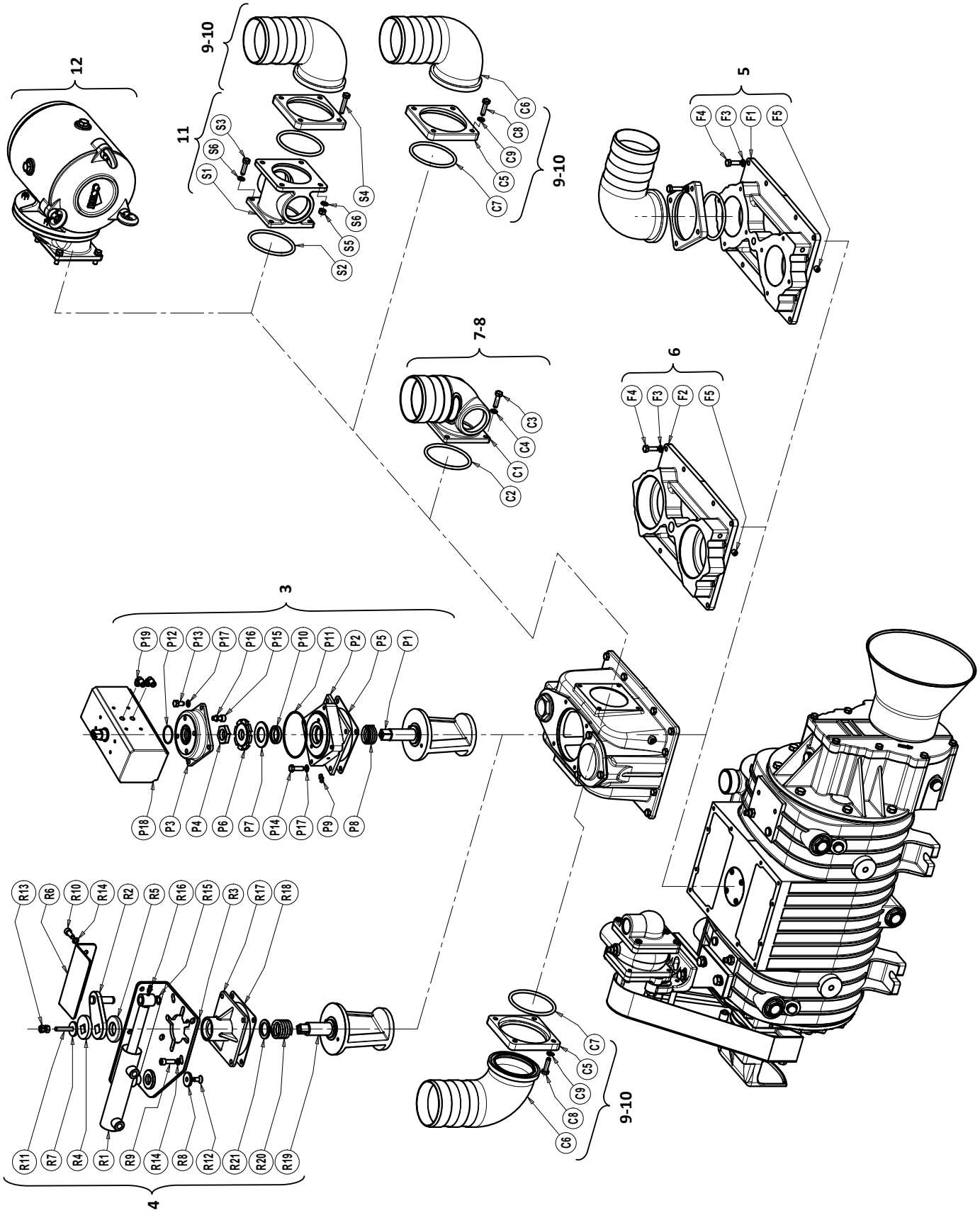

Accessories LC300

Pos.	Code	Description	Q.ty
3	**143028B7B0**	**PNEUMATIC OPERATED 4-WAY KIT**	
P1	160858KNB0	CONVEYOR	1
P2	161258B4B0	ACTUATOR SUPPORT	1
P3	1640580QB0	ACTUATOR COVER	1
P4	167007ZAB0	CONVEYOR NUT	1
P5	1680700200	FALNGE GASKET	1
P6	168409PQB0	RING NUT	1
P7	168529TFB0	SPACER	1
P8	1691000200	SPRING	1
P9	4022100100	GREASING NIPPLE M6X1	1
P10	4022200005	Y-SEAL 37X27X7	1
P11	4022200330	OR 3375	1
P12	4022200331	OR 2137	1
P13	4026102804	SCREW M8X16	4
P14	4026102807	SCREW M8X25	4
P15	4026121405	SCREW M8X20	4
P16	4026350505	WASHER GROWER M8	4
P17	4026351505	TOOTHED WASHER M8	8
P18	4027100405	PNEUMATIC ACTUATOR	1
P19	4027421206	FITTING R15 6XG1/8	2
4	**143029K2B0**	**HYDRAULIC OPERATED 4-WAY KIT**	
R1	143027T6B0	HYDRAULIC ACTUATOR	1
R2	150206XXB0	ACTUATOR LEVER	1
R3	151309JVB0	ACTUATOR SUPPORT	1
R4	16240A0IB0	SPACER	1
R5	1624202300	SPACER	1
R6	164206XYB0	PROTECTION	1
R7a	16850A0YB0	WASHER	1
R7b	168509LLB0	WASHER	1
R8	168509U0B0	WASHER	1
R9	4026121407	SCREW M8X25	4
R10	4026121405	SCREW M8X20	2
R11	4026135414	SCREW M8X45	1
R12	4026155705	SCREW M8X16	1
R13	4026308005	NUT M8	4
R14	4026350505	WASHER GROWER M8	6
R15	4026510012	SEEGER E14 7435	1
R16	4022100100	GREASING NIPPLE M6X1	1
R17	1623100800	CONVEYOR FLANGE	1
R18	1680700200	FLANGE GASKET	1
R19	1608503200	CONVEYOR	1
R20	1691000000	SPRING	1
R21	1624027500	SPRING SPACER	1
5		**FLANGED MANIFOLD**	
F1	1627505500	FLANGED MANIFOLD	1
F3	4026350706	WASHER GROWER M8	12
F4	4026102807	SCREW M8X25	12
F5	4026135504	SCREW M10X10	1

Pos.	Code	Description	Q.ty
6		**THREADED MANIFOLD**	
F2	1627505600	THREADED MANIFOLD	1
F3	4026350706	WASHER GROWER M8	12
F4	4026102807	SCREW M8X25	12
F5	4026135504	SCREW M10X10	1
7	**1852108600**	**FIXED SUCTION CONVEYOR Ø80 KIT**	
C1	1627100300	CONVEYOR Ø80	1
C2	4022200307	OR 6287	1
C3	4026103002	SCREW M12X30	2
C4	4026350709	WASHER GROWER M12	2
8	**1852108900**	**FIXED SUCTION CONVEYOR Ø76 KIT**	
C1	1627100200	CONVEYOR Ø76	1
C2	4022200307	OR 6287	1
C3	4026103002	SCREW M12X30	2
C4	4026350709	WASHER GROWER M12	2
9	**1852109000**	**TURNING CONVAYOR Ø76 KIT**	
C5	1610100000	CONVEYOR FLANGE	1
C6	1627100500	CONVEYOR Ø76	1
C7	4022200307	OR 6287	1
C8	4026103002	SCREW M12X30	2
C9	4026350709	WASHER GROWER M12	2
12	**18521CNGB0**	**SUCTION FILTER KIT**	
	18920F3XB0	GASKETS KIT LC300 M	1
	18920F3YB0	GASKETS KIT LC300 D	1

jurop

Accessories LC420 - 580

Pos.	Code	Description	Q.ty
3	**143028GZB0**	**PNEUMATIC OPERATED 4-WAY KIT**	
P1	160858KBB0	CONVEYOR	1
P2	161258H0B0	ACTUATOR SUPPORT	1
P3	1640580QB0	ACTUATOR COVER	1
P4	167007ZAB0	CONVEYOR NUT	1
P5	1680707800	FALNGE GASKET	1
P6	168409PQB0	RING NUT	1
P7	168529TFB0	SPACER	1
P8	1691000200	SPRING	1
P9	4022100100	GREASING NIPPLE M6X1	1
P10	4022200005	Y-SEAL 37X27X7	1
P11	4022200330	OR 3375	1
P12	4022200331	OR 2137	1
P13	4026102804	SCREW M8X16	4
P14	4026102807	SCREW M8X25	4
P15	4026121405	SCREW M8X20	4
P16	4026350505	WASHER GROWER M8	4
P17	4026351505	TOOTHED WASHER M8	8
P18	4027100405	PNEUMATIC ACTUATOR	1
P19	4027421206	FITTING R15 6XG1/8	2
4	**143029KRB0**	**HYDRAULIC OPERATED 4-WAY KIT**	
R1	143027T6B0	HYDRAULIC ACTUATOR	1
R2	15020A10B0	ACTUATOR LEVER	1
R3	151307TJB0	ACTUATOR SUPPORT	1
R4	1624043400	SPACER	1
R5	1624202300	SPACER	1
R6	164206XYB0	PROTECTION	1
R7	1685002800	WASHER 30X8.5X4	1
R8	168509U0B0	WASHER	1
R9	4026121408	SCREW M8X35	4
R10	4026121405	SCREW M8X20	2
R11	4026135414	SCREW M8X45	1
R12	4026155705	SCREW M8X16	1
R13	4026308005	NUT M8	4
R14	4026350505	WASHER GROWER M8	6
R15	4026510012	SEEGER E14 7435	1
R16	4022100100	GREASING NIPPLE M6X1	1
R17	1623100500	CONVEYOR FLANGE	1
R18	1680707800	FLANGE GASKET	1
R19	1608502500	CONVEYOR	1
R20	1691000000	SPRING	1
R21	1624027500	SPRING SPACER	1
5		**FLANGED MANIFOLD**	
F1	1627504800	FLANGED MANIFOLD	1
F3	4026351505	TOOTHED WASHER M8	12
F4	4026102807	SCREW M8X25	12
F5	4026135504	SCREW M10X10	1

Pos.	Code	Description	Q.ty
6		**THREADED MANIFOLD**	
F2	1627504900	THREADED MANIFOLD	1
F3	4026351505	TOOTHED WASHER M8	12
F4	4026102807	SCREW M8X25	12
F5	4026135504	SCREW M10X10	1
7	**1852103400**	**FIXED SUCTION CONVEYOR Ø80 KIT**	
C1	1627101300	CONVEYOR Ø80	1
C2	4022200310	OR 6362	1
C3	4026102807	SCREW M8X25	4
C4	4026350706	WASHER GROWER M8	4
8	**1852103500**	**FIXED SUCTION CONVEYOR Ø100 KIT**	
C1	1627101200	CONVEYOR Ø100	1
C2	4022200310	OR 6362	1
C3	4026102807	SCREW M8X25	4
C4	4026350706	WASHER GROWER M8	4
9	**1852103900**	**TURNING CONVAYOR Ø80 KIT**	
C5	1610101100	CONVEYOR FLANGE	1
C6	1627102700	CONVEYOR Ø80	1
C7	4022200310	OR 6362	1
C8	4026102808	SCREW M8X30	4
C9	4026350706	WASHER GROWER M8	4
10	**1852104000**	**TURNING CONVAYOR Ø100 KIT**	
C5	1610101100	CONVEYOR FLANGE	1
C6	1627102400	CONVEYOR Ø100	1
C7	4022200310	OR 6362	1
C8	4026102808	SCREW M8X30	4
C9	4026350706	WASHER GROWER M8	4
11	**1852104100**	**KIT FOR SAFETY VALVE**	
S1	1627102500	CONVEYOR	1
S2	4022200310	OR 6362	1
S3	4026102807	SCREW M8X25	4
S4	4026102810	SCREW M8X40	4
S5	4026308005	NUT M8	4
S6	4026350706	WASHER GROWER M8	8
12	**185212L4B0**	**SUCTION FILTER KIT**	
	189207X0B0	GASKETS KIT LC420 M	1
	189207X2B0	GASKETS KIT LC420 D	1
	1892008800	GASKETS KIT LC580 M	1
	1892008900	GASKETS KIT LC580 D	1